**Code article 86.OW10.2301.03**

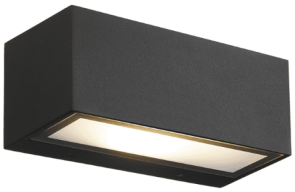

①

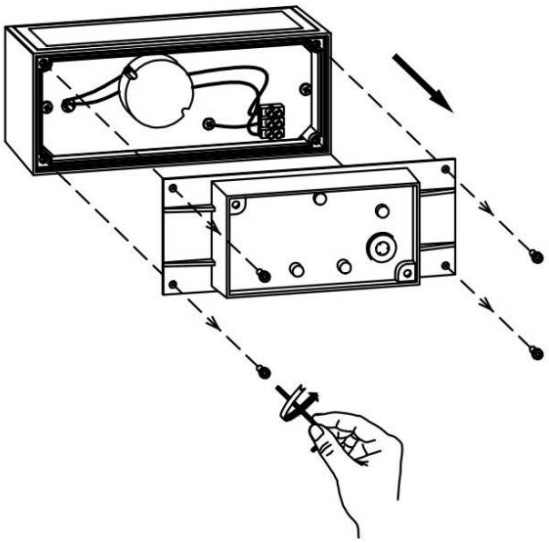

②

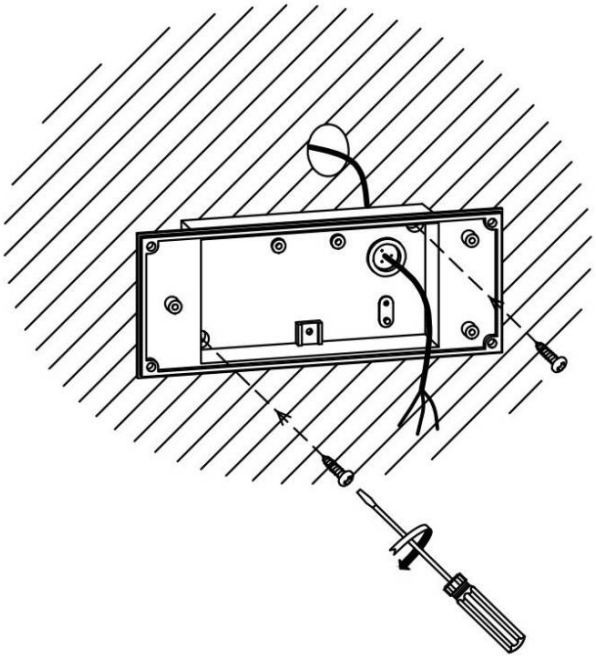

③

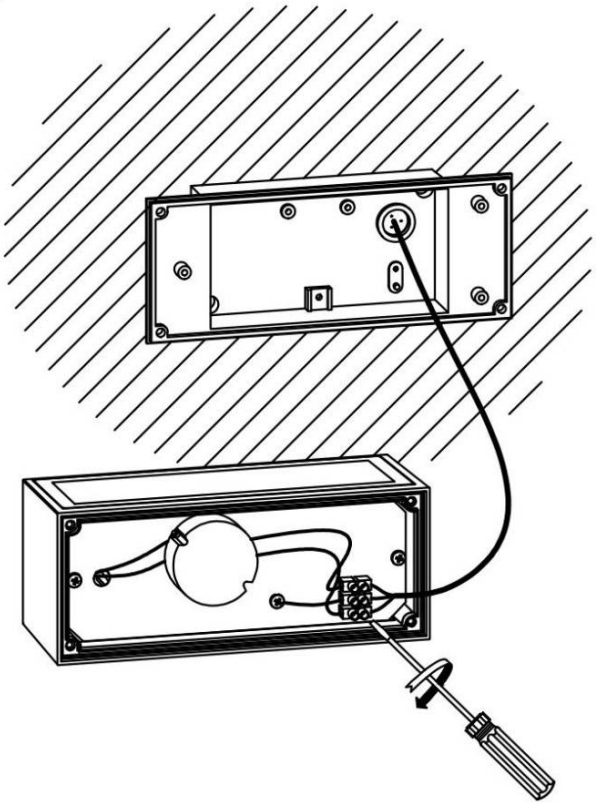

④

